WEIGHING REPO

...: DA 40 NG Serial Number: D4.348 Registration: F-HPDF

Data with reference to the Type Certificate Data Sheet and the Airplane Flight Manual.

Reference Plane: Vertical plane 2194 mm (86.38 in) in front of the leading edge of wing at the root rib.

Horizontal reference line: Wedge 600:31 (2.96°), 2910mm (114.57 in) aft of the step in the cockpit trim.

Equipment Inventory - dated: 09.07.15 Cause for Weighing: OSB-D4-080

Weight and Balance Calculations (Weighing at the wheels)

Weight Condition: Include brake fluid, engine oil (MAX level), coolant, and unusable fuel (2 x 1 US gal / 2 x 3.8 liters).

Support	Gross	Tare	Net
MAIN G_{1LH}			374,1 kg
MAIN G_{1RH}			371,1 kg
NOSE G_2			159,4 kg
		Empty Weight	904,6 kg

Lever Arm
X_{1LH} = 2738 mm
X_{1RH} = 2738 mm
X_2 = 1033 mm

Calculate the Empty Weight, G = MAIN G_{1LH} + MAIN G_{1RH} + NOSE G_2. *Empty Weight must be between 849,5kg and 958,5kg. If MÄM 40-662 is installed. Empty Weight must between 849,5kg and 988,5kg.*		G = 904,6 kg
Calculate the Empty Weight Moment, $M = ((G_{1LH} + G_{1RH}) * X_1) + (G_2 * X_2)$.		M = 2 205017,8
Calculate the Empty Weight Center-of-Gravity position, X_{CG} = M/G.		X_{CG} = 2 437,56
Maximum Take Off Weight MTOW	VÄM 40-004 (OSB D4-080)	1280 kg
	MÄM 40-662	1310 kg
Maximum useful load = MTOW - G.		375,4 kg

Record the Empty Weight (G) and the Empty-Weight Moment (M) in the Airplane Flight Manual.

Place/Date	Authorizing Stamp	Authorizing Signature
LOAN / 09.07.2015	Diamond Aircraft Lic. No AT.66.1209 AT.145.073	[signature]

REVISI...

REV	SH	ZONE	DESCRIPTION	...E	APPROVAL
B	01	ALL	MÄM 40-379 IN SECTOR E7 WEIGHING AT ... JACKING POINTS CORRECTED TO WEIGHING AT THE WHEELS. IN SECTOR D5 X_1 CORRECTED TO X_{1LH} AND X_2 CORRECTED TO X_{1RH} AND NEW TEXT X_2. IN SECTOR D8 TAIL G_2 CORRECTED TO NOSE G_2. IN SECTOR D6 NEW DESCRIPTION MAXIMUM TAKE OFF WEIGHT MTOW AND MAXIMUM USEFUL LOAD = MTOW - G. DIMENSIONS & NEW VIEW ADDED. IN SECTOR C8 TEXT EMPTY WEIGHT NEW ADDED. IN SECTOR C5 TEXT 1280kg NEW ADDED	...1.2012	SCHEIKL
C	01	ALL	MÄM 40-662 IN SECTOR C7 TEXT EMPTY WEIGHT CORRECTED. IN SECTOR C6 VÄM 40-004 (OSB D4-080) AND MÄM 40-662 NEW ADDED. IN SECTOR C5 1310 kg NEW ADDED.	04.09.2014	SEE TB

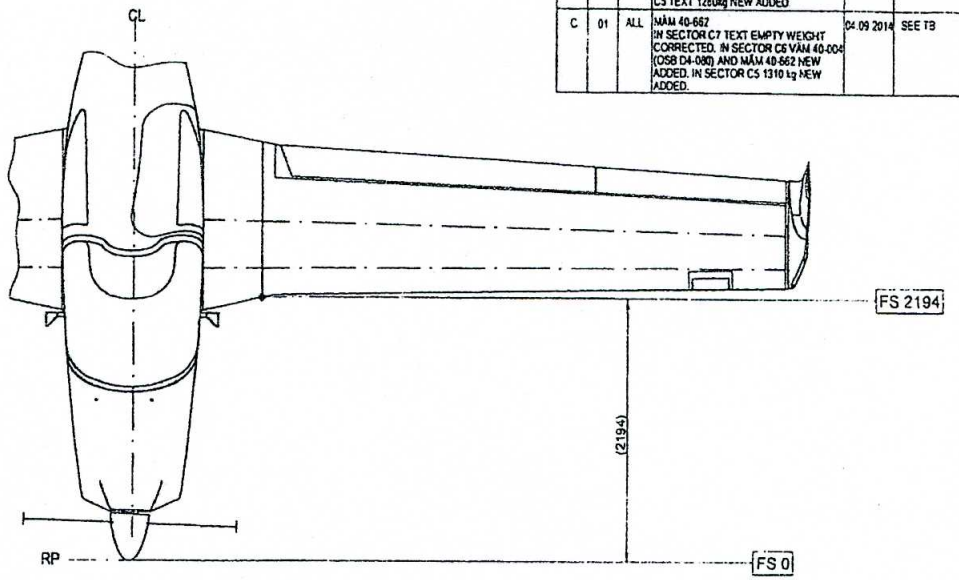

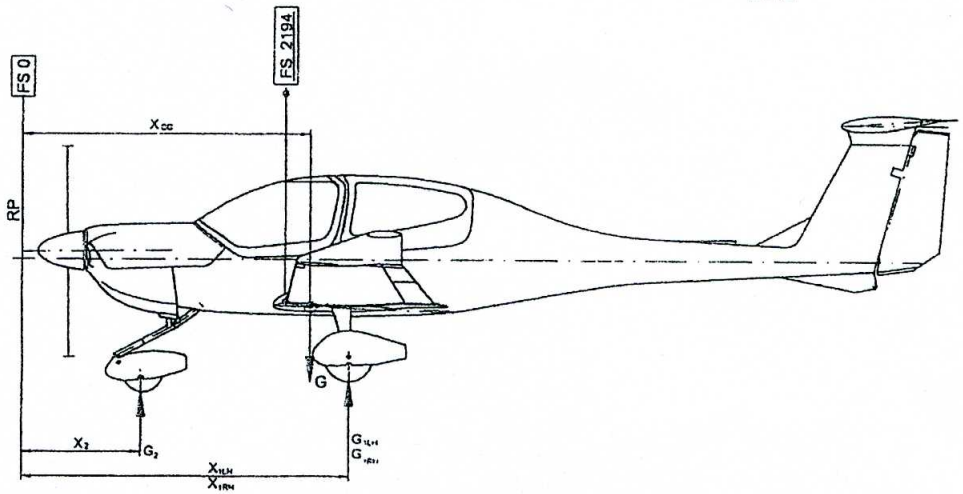

DIMENSIONS METRIC	IDENTIFICATION MARKINGS DP-S-17-00001	Diamond Aircraft Industries			N. A. Otto-Straße 5 A-2700 Wiener Neustadt
FIRST ANGLE PROJECTION / FORMAT A2	CLASSIFICATION NONE	DEPARTMENT	SIGN	DATE	PROJECT DA 40 NG
UNLESS OTHERWISE SPECIFIED DIMENSIONS ARE IN MM	INTERCHANGEABLE PART NO	DRAWN Schuster	[signature]	14.10.2014	TITLE WEIGHING REPORT (WEIGHING AT THE WHEELS)
DIMENSION TOLERANCES 2 DECIMAL ±0,25 1 DECIMAL ±0,5 DECIMAL ±1 ANGLE ±1° R/D ±0,5 FINISH IN MICROMETER	THIS DRAWING WAS PRODUCED USING SOFTWARE SOLID EDGE ST6	CHECKED Genster	[signature]	14.Oct.2014	
		QA N/A			
		STRESS Krassnitzer	[signature]	14.Oct.2014	
		MANUF N/A			DWG.ORIG DAIA / DWG.NO. D44-0810-00-00 / REV C
	FILENAME D44-0810-00-00c.dft	SYSTEM N/A			
		APPROVED Scheikl	[signature]	14.Oct.2014	CODE 710197 / SCALE NTS / SH 01 OF 01

ALL RIGHTS RESERVED FOR THIS DOCUMENT WHICH MAY NOT BE REPRODUCED OR DISCLOSED TO THIRD PARTIES WITHOUT THE PRIOR WRITTEN CONSENT OF DIAMOND AIRCRAFT INDUSTRIES